PRODUCT DATASHEET

MH6 LT

FASTCAM series by Photron

HD Camera Head Performance:
1920 x 1400 pixels at 750fps
1920 x 1080 pixels at 1,000fps
1280 x 800 pixels at 2,000fps
1280 x 256 pixels at 5,000fps

ST Camera Head Performance:
800 x 600 pixels at 1,000fps
800 x 312 pixels at 2,000fps
800 x 120 pixels at 5,000fps

Class Leading Light Sensitivity:
ISO 5,000 color
ISO 12,500 monochrome

Global Electronic Shutter:
4µs independent of frame rate

Dynamic Range (ADC):
24-bit color
8-bit monochrome

Ultra-Compact and Lightweight:

HD Camera Head:
35mm x 35.4mm x 35.4mm, weight 100g
1.38in x 1.39in x 1.39in, weight 0.22 lbs

ST Camera Head:
15mm x 15mm x 15mm, weight 12g
0.59in x 0.59in x 0.59in, weight 0.026 lbs

Processor:
210mm x 70mm x 150mm, weight 3kg
8.27in x 2.76in x 5.91in, weight 6.61 lbs

Internal Recording Memory:
60GB divided between all connected camera heads

High-Speed Interface:
Provides camera control and image download to network via fast Gigabit Ethernet, and USB3 interface for local image download

Recording Memory Protection:
Automatic download to internal 1TB SSD

High-G Rated:
Camera Heads: 160G, 10 msec, 6 axes, 1,000 times
Processor: 100G, 10 msec, 6 axes, 1,000 times

RUGGEDIZED, LONG RECORD TIME, MULTI-HEAD HIGH-SPEED CAMERA SYSTEM

With 2.5x the internal recording memory of the standard MH6, the MH6 LT is a camera system designed for applications not limited to vehicle track and road tests, vibration testing or impact testing where longer recording durations might be required. For instance, with the HD camera head the MH6 LT can capture up to 124 continuous seconds of video at Full HD resolution (1920 x 1080 pixels) and a frame rate of 250fps. Alternatively, with the ST camera head the MH6 LT can capture up to 268 seconds of video at a resolution of 800 x 600 pixels and a frame rate of 250fps.

The FASTCAM MH6 system supports up to six compact HD camera heads (35.4 x 35 x 35.4mm, weight 100g), or 12 miniature ST camera heads (15 x 15 x 15mm, weight 15g). A combination of HD and ST camera heads may each be connected via a 10m cable to the main processor, facilitating a wide range of camera head viewing angles and mounting positions. All camera heads are extremely rugged and have been operationally tested to 160G. Each MH6 camera head, regardless of type (HD or ST), provides outstanding image quality and industry leading light sensitivity of ISO 5,000 color and ISO 12,500 monochrome. HD camera heads capture images with 1080 full HD resolution at 1,000 frames per second (fps) and are compatible with readily available 1-inch C-mount ruggedized lenses. ST camera heads capture images with 800 x 600 (SVGA) resolution at 1,000fps and utilize M10.5 ruggedized lenses.

The MH6 LT processor internally handles distribution of trigger and synchronization to each camera head and provides rapid, automated image download to an internal 1TB SSD immediately following the recording of a high-speed event. Afterwards, image transfer to a computer is possible via Gigabit Ethernet and USB3.

HD-Cam

35.4 x 35 x 35.4 mm
1920 x 1080 @1,000fps

ST-Cam

15 x 15 x 15 mm
800 x 600 @1,000fps

Performance and Operation Specifications

	HD Camera Head	ST Camera Head
Full frame performance	750fps, 1920 x 1400 pixels	1,000fps, 800 x 600 pixels
1,000fps	1920 x 1080 pixels (FHD)	800 x 600 pixels (SVGA)
2,000fps	1280 x 800 pixels	800 x 312 pixels
5,000fps	1280 x 256 pixels	800 x 120 pixels
Sensor size / Pixel size	12.67 x 9.24mm / diagonal 15.68mm 6.6µm square pixel	5.28 x 3.96mm / diagonal 6.6mm 6.6µm square pixel
Light Sensitivity	ISO 5,000 color, ISO 12,500 monochrome	
Minimum Exposure Time	Global electronic shutter to 4µs selectable independent of frame rate	
Dynamic Range (ADC)	8-bit monochrome, 24-bit color	
Memory Capacity	24GB shared between active channels. With automatic NVRAM back up	
Data Storage	Built-in 512GB SSD with autosave function	
Input / Output	Input: Trigger (TTL/Switch), sync, ready, event, IRIG Output: Trigger, sync, ready, rec, exposure	
Accelerometer	MH6 main unit has built in 3-axis / 1kHz acceleration sensor. User may set threshold such that the system triggers based on detected shock level.	
Camera Control Interface	High-speed Gigabit Ethernet and USB3	
Supported OS	Microsoft Windows operating systems including: 7, 8, 8.1, 10, 11 (32/64-bit)	

Performance and Operation Specifications

Mechanical		
	HD Camera Head	ST Camera Head
Lens Mount	C-mount	M10.5
Total Camera Cable Length	7m / 10m	8m / 11m
Head Size (HWD)	35.4mm x 35mm x 35.4mm (1.38in x 1.39in x 1.39in)	15mm x 15mm x 15mm (0.59in x 0.59in x 0.59in)
Head Weight	100 grams (0.22lbs)	12 grams (0.026lbs)
Processor Size (HWD)	210mm x 70mm x 150mm (8.27in x 2.76in x 5.91in)	
Processor Weight	3kg (6.61lbs)	
Environmental		
Operating Temperature	0 to 40C, 32˚ to 104˚F	
Storage Temperature	-20 to 60C, -4˚ to 140˚F	
Humidity	85% or less (non-condensing)	
Operational Shock Camera Head	160G, 10ms, 6-axes, 1,000 times	
Operational Shock Processor	100G, 10ms, 6-axes, 1,000 times	

* Specifications subject to change without notice.

Mechanical & Environmental Specifications

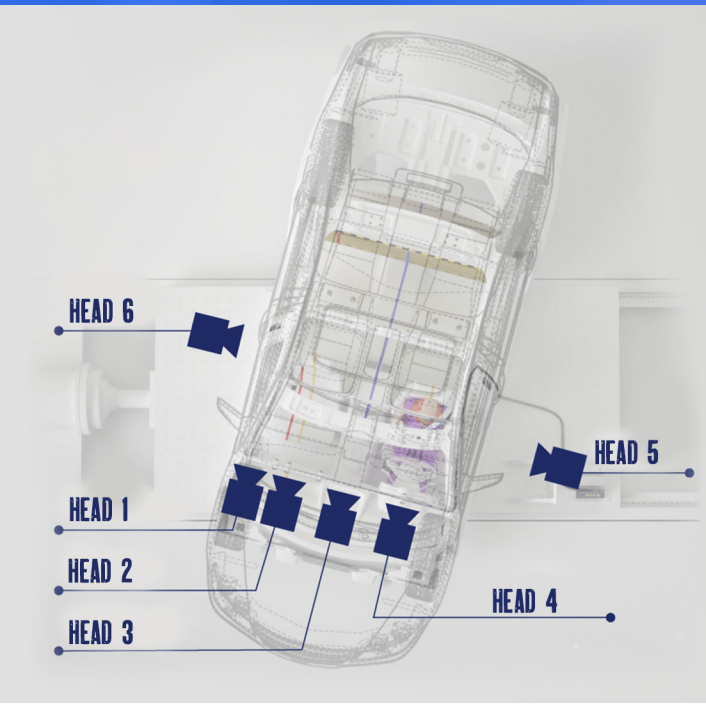

HD-Cam

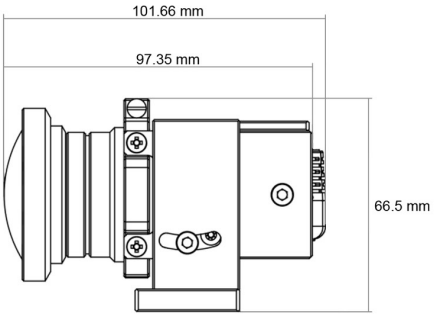

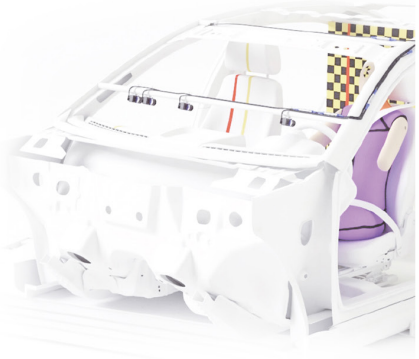

ST-Cam

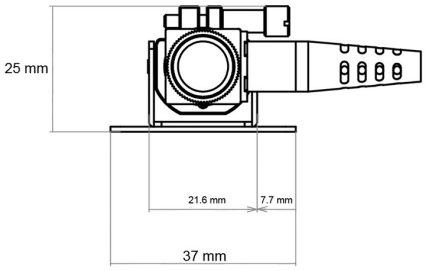

PHOTRON USA, INC.
9520 Padgett Street, Suite 110
San Diego, CA 92126
USA

Tel: 858.684.3555 or 800.585.2129
Fax: 858.684.3558
Email: image@photron.com
www.photron.com

PHOTRON EUROPE LIMITED
The Barn, Bottom Road
West Wycombe
Bucks. HP14 4BS
United Kingdom

Tel: +44 (0) 1494 481011
Fax: +44 (0) 1494 487011
Email: image@photron.com
www.photron.com

PHOTRON (Shanghai)
Room 20C, Zhao-Feng
World Trade Building
No. 369, JiangSu Road
Chang Ning District
Shanghai, 200050 China
Tel: +86 (21) 5268-3700
Fax: +86 (21) 5268-3702
Email: info@photron.cn.com
www.photron.cn.com

PHOTRON LIMITED
21F, Jinbocho Mitsui Bldg.
1-105 Kanda Jimbocho
Chiyoda-ku, Tokyo 101-0051
Japan

Tel: +81 (3) 3518-6271
Fax: +81 (3) 3 3518-6279
Email: image@photron.co.jp
www.photron.co.jp

REV# 25.03.31